TECHNICAL SPECIFICATIONS
Canister Type K - 50 and 60 liter

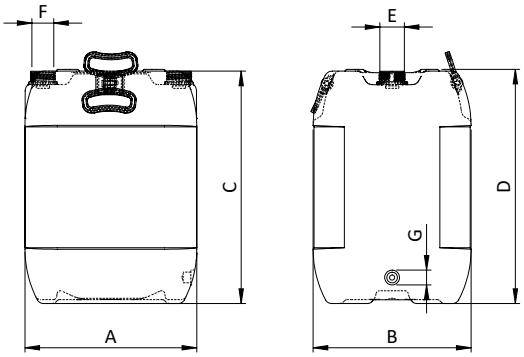

Article name	Article number	Nominal content in liters	Net weight in grams	Packaging unit per PU	Packaging unit per pallete	Approximate dimensions in mm A	B	C	D	E	F	G
5060-K/UG/UN	4299+	50	2600	4	24	370	350	519	525	DIN 60	48	¾ ″
6060-K/UG/UN	4306+	60	2900	4	24	370	350	599	605	DIN 60	48	¾ ″

MATERIAL
- Base material Polyethylene (HDPE)
- Process-related regranulate from the same batch (closed loop, no recycled material from other batches)
- All used materials are approved according to food safety regulations

DESIGN
- Safe packaging of liquid fill goods in Packaging Group I (X)
- Food packaging for the storage and transport of all types of liquid foodstuffs
- Primary packaging for pharmaceutical active ingredients
- Low water vapor permeability
- Corrosion-resistant
- High resistance to chemicals and acids
- Comfortable to carry thanks to the attached handles
- Standard version natural
- Special colors upon request

APPLICATIONS
- Flavors and fragrances
- Cleaning agents
- Disinfectants
- Foods (fatty, acidic, aqueous, alcoholic)
- Pharmaceutical active ingredients

ENVIRONMENT
- Recycling of uncontaminated HDPE is possible
- HDPE can be safely destroyed
- Good residual emptying is ensured
- Colorants are free of heavy metals

PRODUCTION / QUALITY ASSURANCE
- ISO 9001 certified
- BRC production
- Low-germ filtered blown air
- Controlled manufacturing (particles, microbiology, migration)
- Hygiene standards

APPROVAL
- Food packaging in accordance with EC 1935:2004
- 2002/72/EG
- Consumer Goods Ordinance
- UN approval for the transport of dangerous goods according to ADR/SDR, RID/RSD, IATA
- Declaration of conformity according to EU/10/2011

ASSIMILATION
- Water
- Acetic acid
- Wetting agent
- Hydrocarbon mixture
- n-Butyl acetate

STORAGE STABILITY (WITHOUT CONTENTS)
- When stored correctly (dry, without sunlight, and at temperatures from 5° to 30°C), the product is durable for up to two years after the production date.

CLOSURE AND ACCESSORIES
- Screw cap art. 4577 DIN 60-D-PE/G black SR tightening torque 12 – 14 Nm
- Two screw caps per canister
- For more, see accessories sheet

PALLETIZATION
- Euro pallet (class A) 80 x 120 cm
- 5060-KE pallet height approx. 225 cm
- 6060-KE pallet height approx. 225 cm

© Fischer Söhne Extrusion AG, 11/2025

FISCHER BLOW MOLDING. PACKAGING.
Fischer Söhne Extrusion AG
Luzernerstrasse 105, CH-5630 Muri, Phone +41 56 675 49 00,
verkauf@fischersoehne.ch, fischersoehne-extrusion.ch